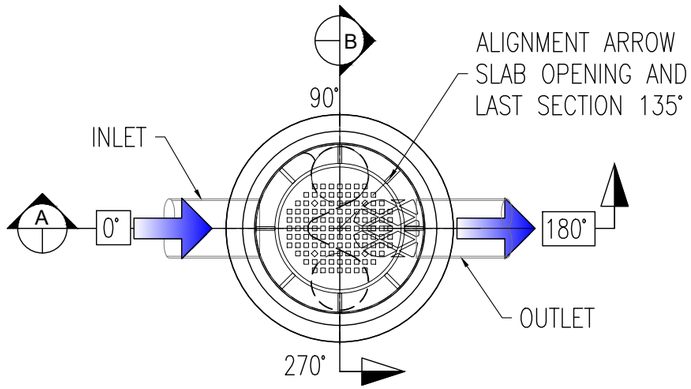

1 PLAN VIEW
Scale: 3/8"

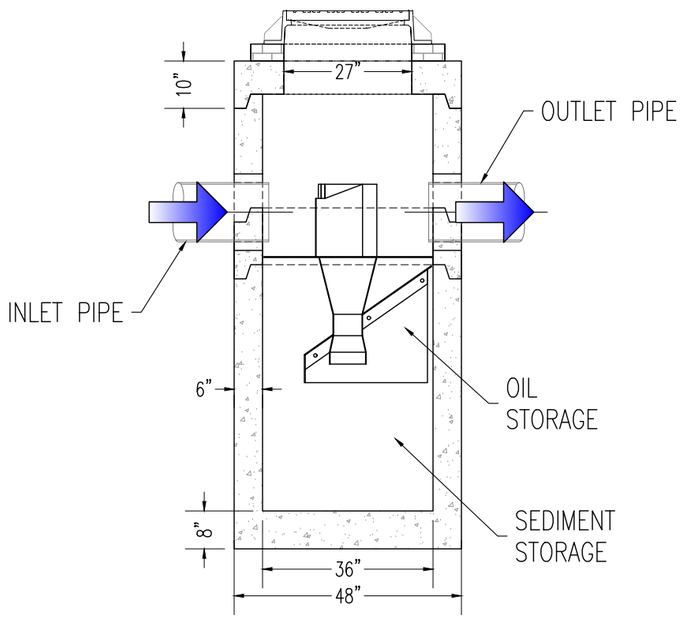

2 SECTION A
Scale: 3/8"

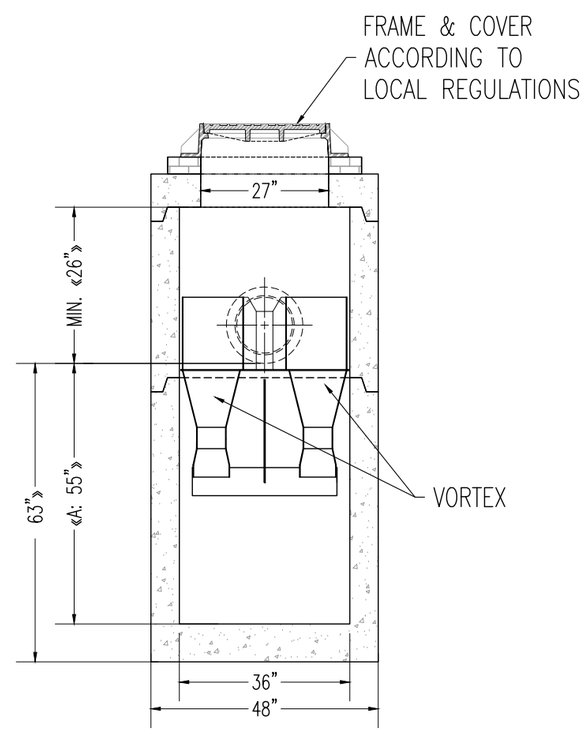

3 SECTION B
Scale: 3/8"

SDD3 900	
MAX. FLOW RATE	1.0 cfs
SEDIMENT STORAGE CAPACITY	18.0 ft³
OIL STORAGE CAPACITY	31 gal

MINIMUM ANGLE PER MODEL

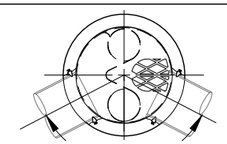

Min. angle

SDD3 ™ MODEL	PIPE Ø In.	MINIMUM <
900	8	90°
	15	110°
	18	125°

GENERAL NOTES:

- STANDARD REFERENCE DRAWING. FOR SPECIFIC PROJECT DRAWINGS, PLEASE CONTACT NEXT STORM TECHNICAL DEPARTMENT.
- DESIGN AND DIMENSIONAL TOLERANCES ACCORDING TO LOCAL REGULATIONS
- STANDARD HEIGHTS. OTHER OPTIONS AVAILABLE ON REQUEST
- CONFIGURATION: ON-LINE / OFF-LINE EXTERNAL REINFORCED CONCRETE STRUCTURE
- SHOULD SUPPORT A CL-625, H-25, AND HS-20 LOAD
- THIS PRODUCT IS PROTECTED BY THE US 16/901,238 PATENT OTHER PATENTS PENDING

SPECIFIC NOTES SDD3 900 MODEL

- MAX. DIAMETER OF PIPES: Ø18 in. OTHER DIAMETERS AVAILABLE ON REQUEST

PROJECT DATA

MODEL : SDD3 900

IDENTIFICATION OF THE STRUCTURE :
QUALITY FLOW (GPM):
PEAK FLOW (GPM):

PIPE	TYPE	DIAMETER (in)	INVERT (ft)	ANGLE
INLET 1				
INLET 2				
OUTLET				
GRADE/RIM ELEVATION (ft)				

NOTES:

SDD3™ 900

INVERT INLET AND INVERT OUTLET MAY BE AT THE SAME ELEVATION

NEXT
info@nextinfras.com
www.nextinfras.com
1305 Hill Ave.
West Palm Beach, FL 33407